DWG NO. 6112

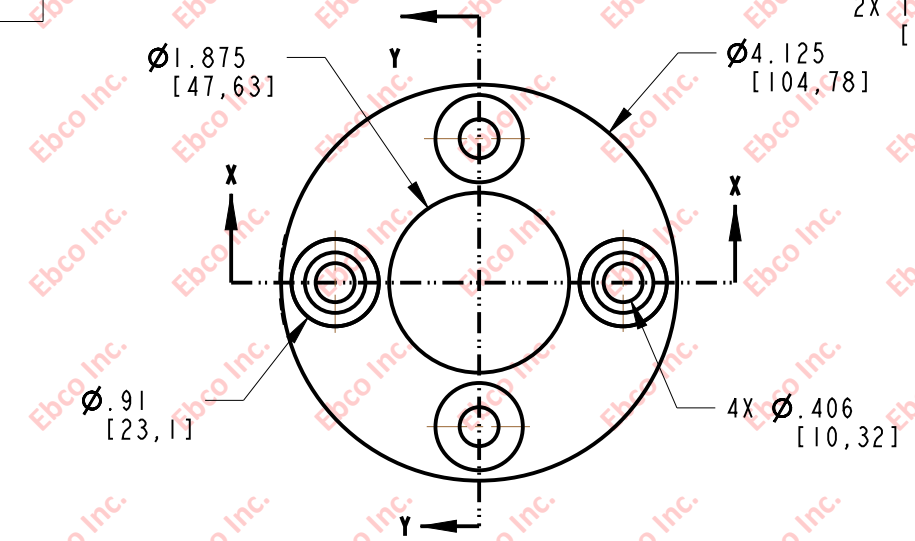

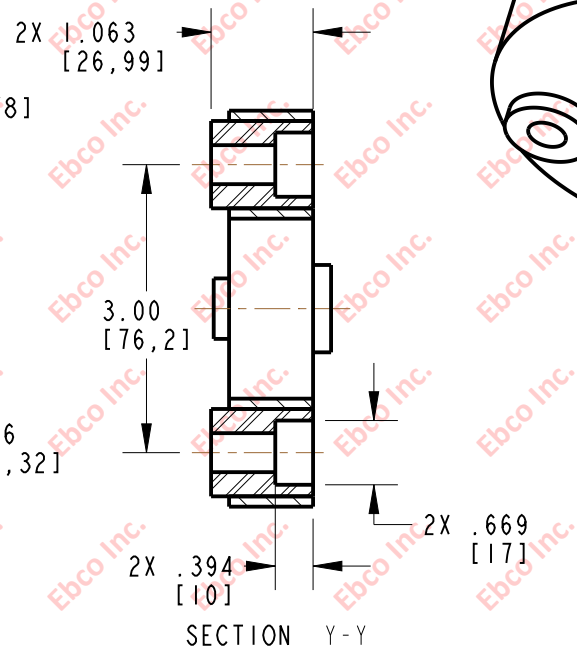

SECTION Y-Y

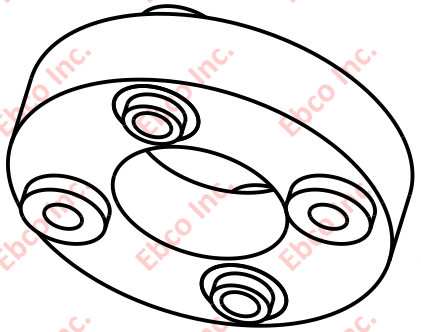

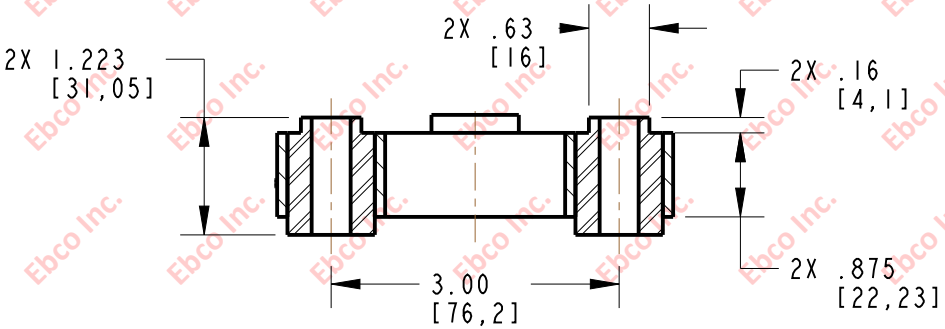

SECTION X-X

*AVAILABLE IN A VARIETY OF MATERIALS AND STIFFNESS

Ebco

TITLE: 6112

TOLERANCES PER RMA STANDARD A3	REV. A	DATE: 07-24-20
		UNITS INCH [MM]

1330 HOLMES RD. ELGIN, IL 60123

SPECIFICATIONS SUBJECT TO CHANGE