DWG NO. 6802

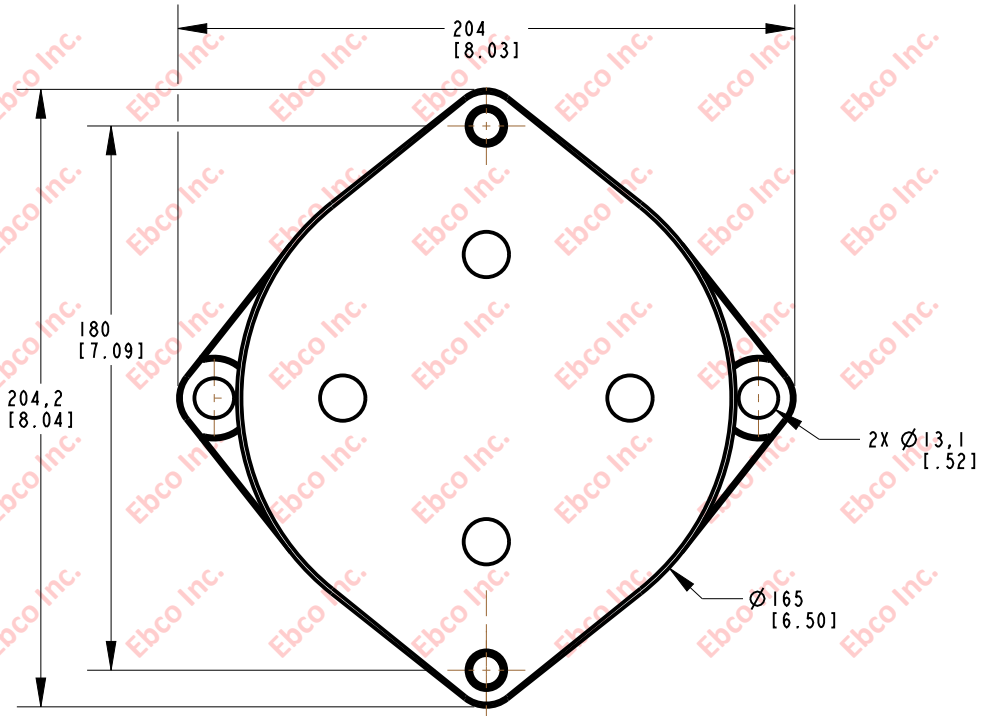

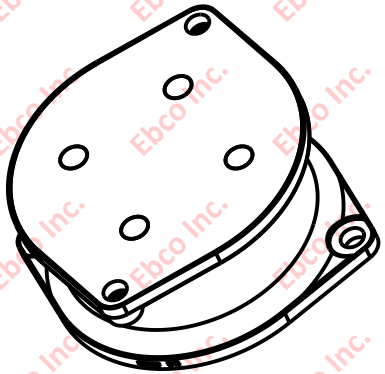

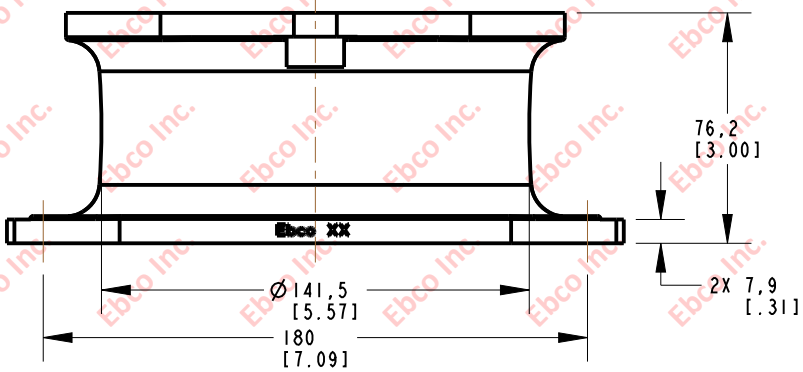

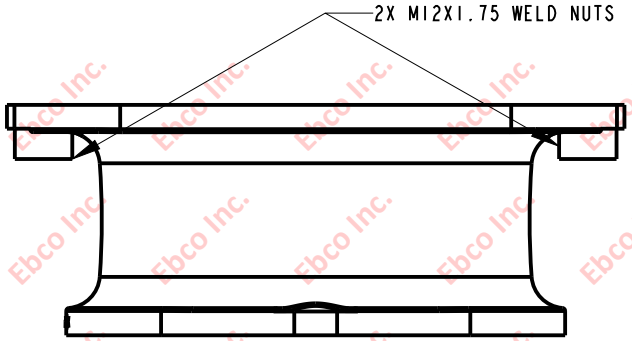

PART NUMBER	SHEAR STIFFNESS
NATURAL RUBBER	N/mm [LBS/IN]
6802-73	175 [1000]
6802-74	228 [1300]
6802-75	228 [1700]

Ebco

TITLE: 6802

TOLERANCES PER RMA STANDARD A3

REV. A

DATE: 08-09-21

UNITS mm [INCH]

1330 HOLMES RD. ELGIN, IL 60123

SPECIFICATIONS SUBJECT TO CHANGE